SAMSUNG CONFIDENTIAL
THIS DOCUMENT CONTAINS CONFIDENTIAL
PROPRIETARY INFORMATION THAT IS
SAMSUNG ELECTRONICS CO'S PROPERTY.
DO NOT DISCLOSE TO OR DUPLICATE FOR OTHERS
EXCEPT AS AUTHORIZED BY SAMSUNG.

A15_LTE_REV03D

2023.11.03 SMD
(RF : LA, MST : X, NFC : O)

Sheet01 : GSM / WCDMA / LTE
Sheet02 : TRANSCEIVER, SUB ANT
Sheet03 : CONNECTIVITY(BT/WIFI/FM), NFC
Sheet04 : AP(MT6789)
Sheet05 : AP(POWER), MEM(uMCP)
Sheet06 : PMIC(MT6366), IF PMIC
Sheet07 : AUDIO Codec, SENSOR, SIM, SD
Sheet08 : CAMERA
Sheet09 : DISPLAY PMIC, C2C

SAMSUNG CONFIDENTIAL
THIS DOCUMENT CONTAINS CONFIDENTIAL
AND PROPRIETARY INFORMATION OF
SAMSUNG ELECTRONICS. THIS PROPERTY
DO NOT DISCLOSE TO OR DUPLICATE FOR OTHERS
EXCEPT AS AUTHORIZED BY SAMSUNG.

	CIS/EUR/MEA/AFR/SEA/SWA	LATIN	KOR
FDD	1/ 3/ 5/ 7/ 8/ 20/28	1/ 2/ 3/ 4/ 5/ 7/ 8/ 12/ 13/ 17/ 26/ 28/ 66	1/ 2/ 3/ 4/ 5/ 7/ 8/ 12/ 17/ 20/ 26/ 28/ 66
TDD	38/ 40/ 41	38/ 40/ 41	38/ 40/ 41
3G	1/ 5/ 8	1/ 2/ 4/ 5/ 8	1/ 2/ 4/ 5/ 8
2G	850/ 900/ 1800/ 1900	850/ 900/ 1800/ 1900	850/ 900/ 1800/ 1900

MAIN ANT1 LOW BAND

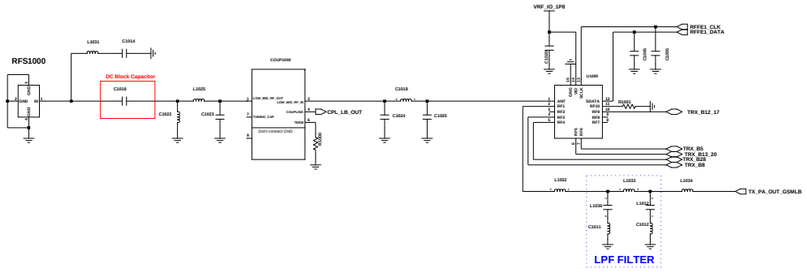

MAIN ANT2
MID/ HIGH BAND

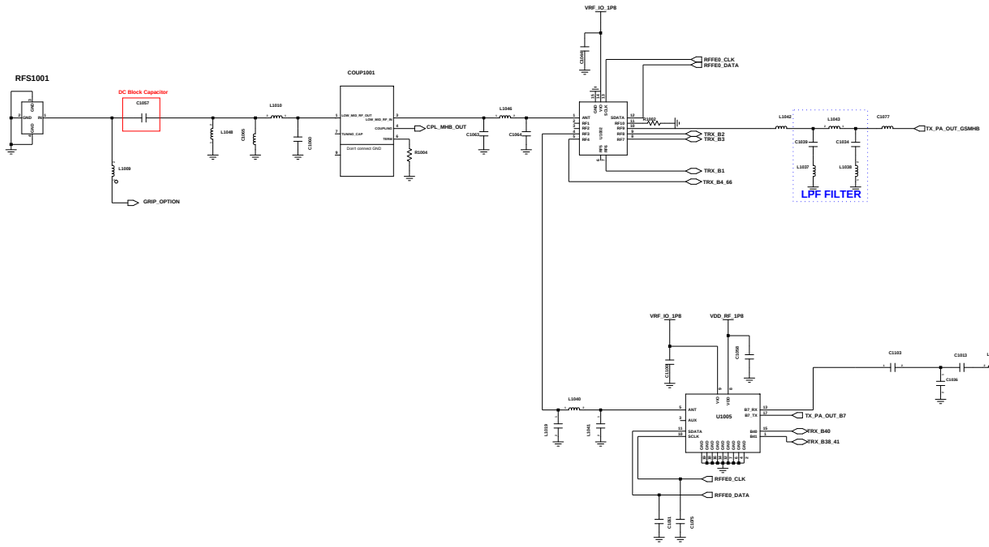

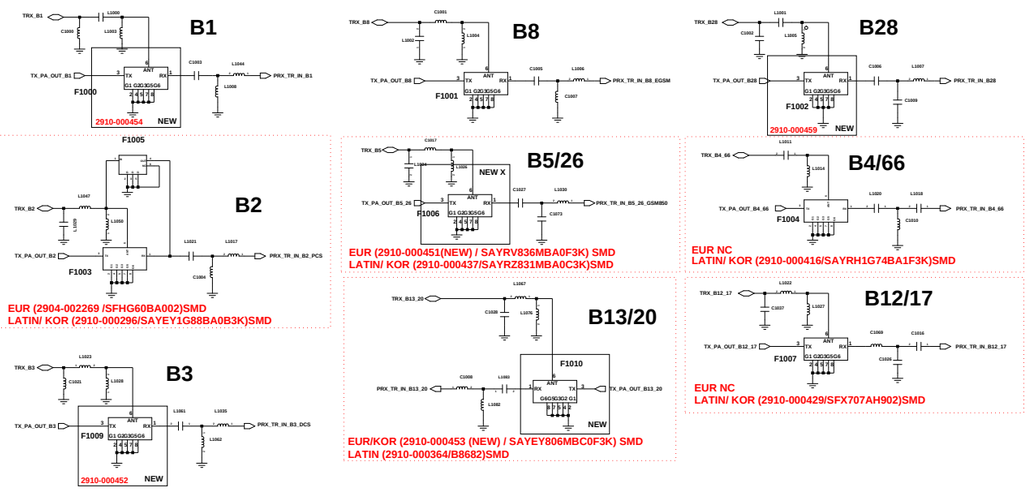

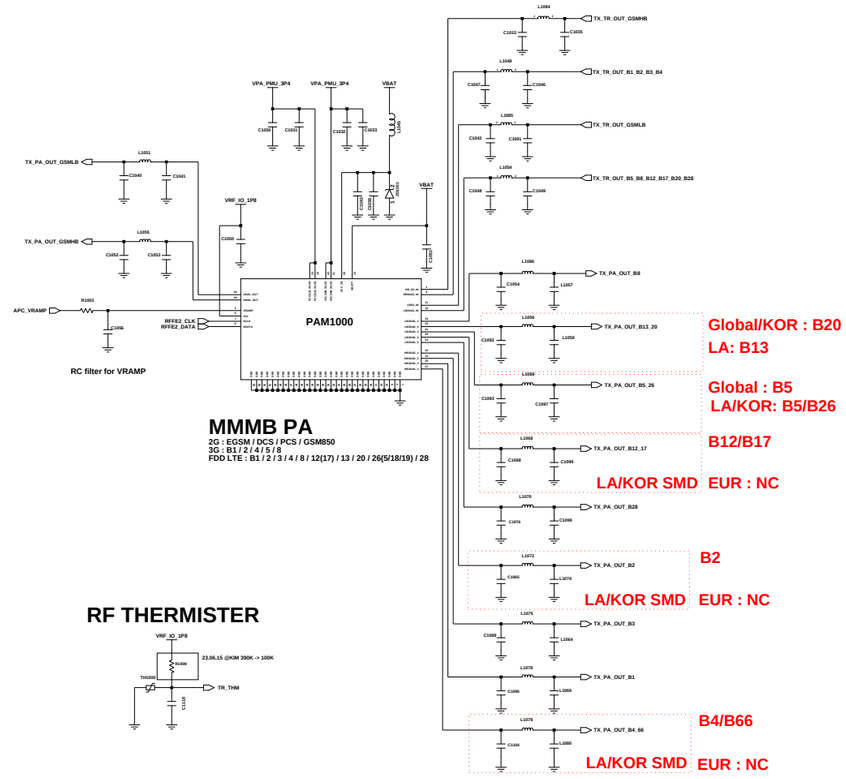

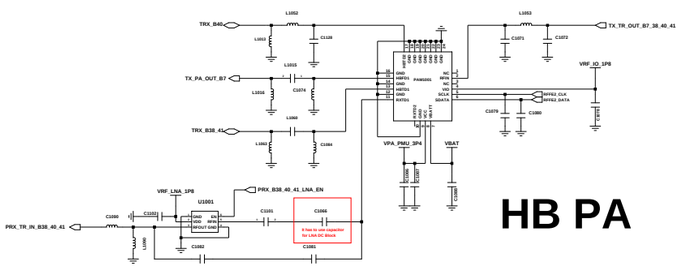

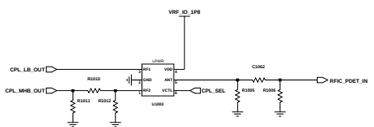

Engineer:	
Drawn by:	
R&D CHK:	TITLE: RF
DOC CTRL CHK:	
MFG SOUR CHK:	
QA CHK:	REV: / Drawing Number:

Changed by: | Date Changed: | Time Changed:

SAMSUNG CONFIDENTIAL
THIS DOCUMENT CONTAINS CONFIDENTIAL
PROPRIETARY INFORMATION THAT IS
SAMSUNG ELECTRONICS CO'S PROPERTY.
DO NOT DISCLOSE TO OR DUPLICATE FOR OTHERS
EXCEPT AS AUTHORIZED BY SAMSUNG.

SUB ANT1

LMHB DRX

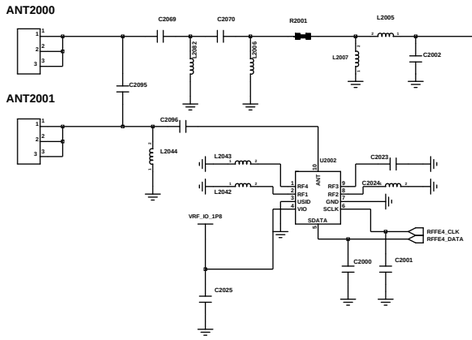

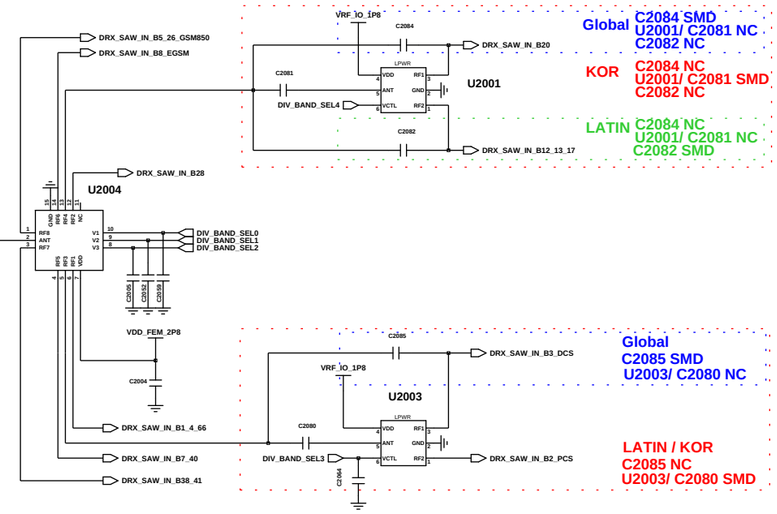

Global C2084 SMD
U2001/ C2081 NC
C2082 NC

KOR C2084 NC
U2001/ C2081 SMD
C2082 NC

LATIN C2084 NC
U2001/ C2081 NC
C2082 SMD

Global
C2085 SMD
U2003/ C2080 NC

LATIN / KOR
C2085 NC
U2003/ C2080 SMD

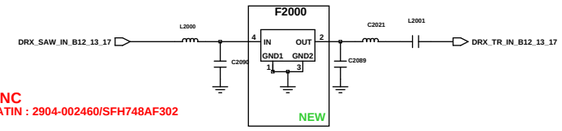

Gobal NC
KOR / LATIN : 2904-002460/SFH748AF302

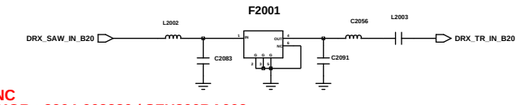

LATIN : NC
Global / KOR : 2904-002280 / SFH806BA002

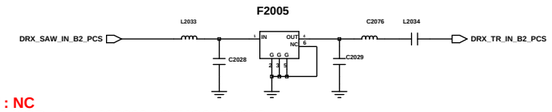

Global : NC
LATIN / KOR : 2904-002269 / SFHG60BA002

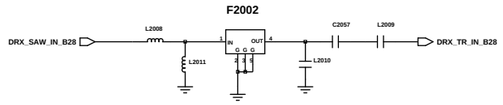

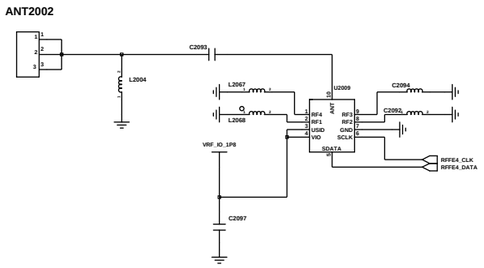

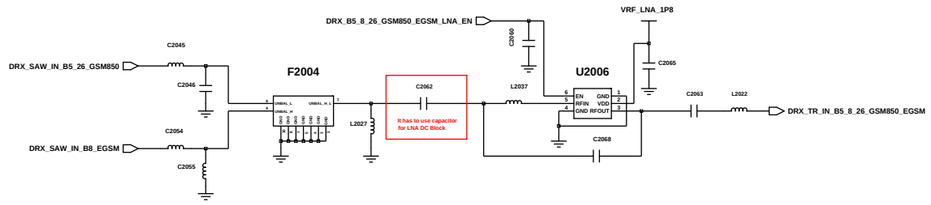

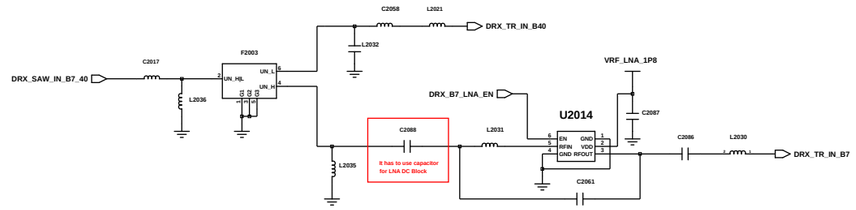

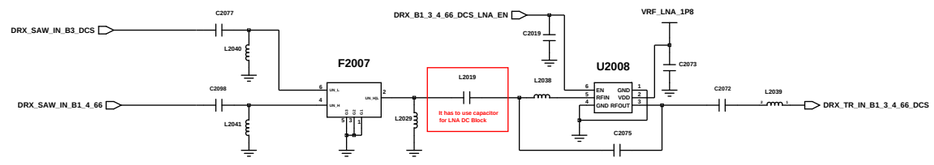

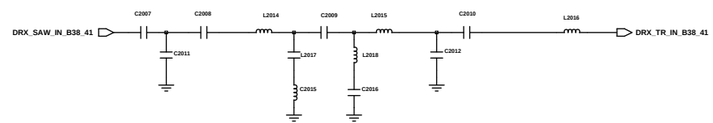

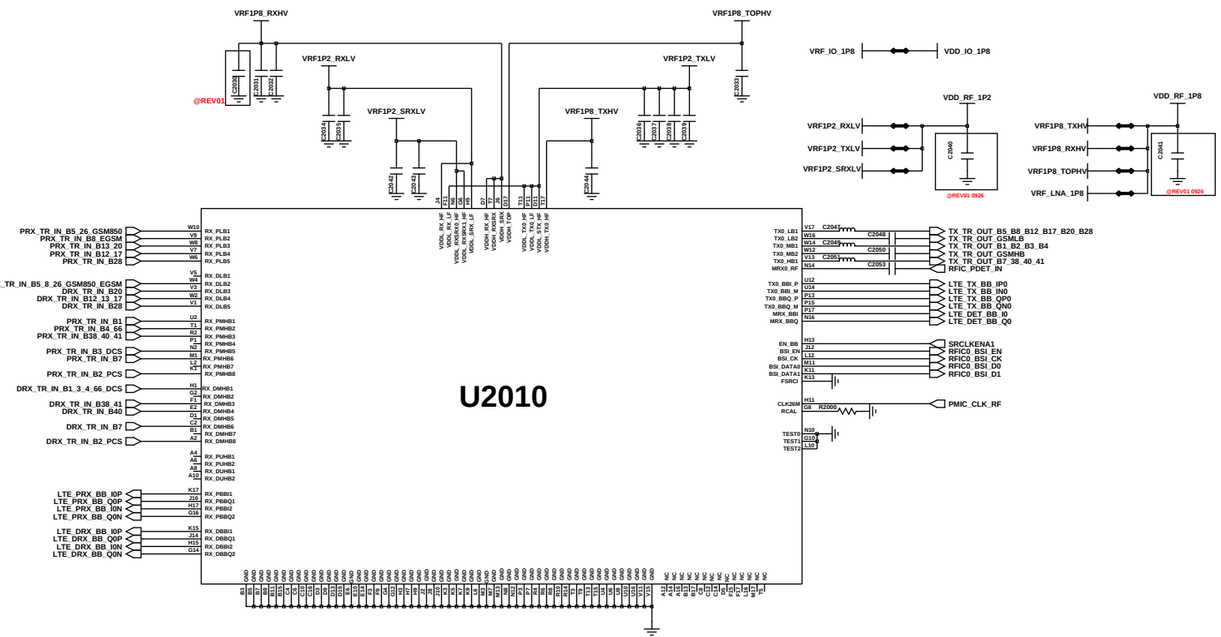

TRANCEIVER

Engineer: SEC	
Drawn by: SEC	
R&D CHK:	TITLE: RF2
DOC CTRL CHK:	Size: 16 1 12 A
MFG ENGR CHK:	
QA CHK:	REV: / Drawing Number: / Page: 2

Changed by: kangbyung.lee | Date Changed: Monday, February 28, 2022 | Time Changed: 3:39:03 pm

SAMSUNG CONFIDENTIAL
THIS DOCUMENT CONTAINS CONFIDENTIAL
PROPRIETARY INFORMATION THAT IS
SAMSUNG ELECTRONICS CO'S PROPERTY.
DO NOT DISCLOSE TO OR DUPLICATE FOR OTHERS
EXCEPT AS AUTHORIZED BY SAMSUNG.

WIFI/BT/FM

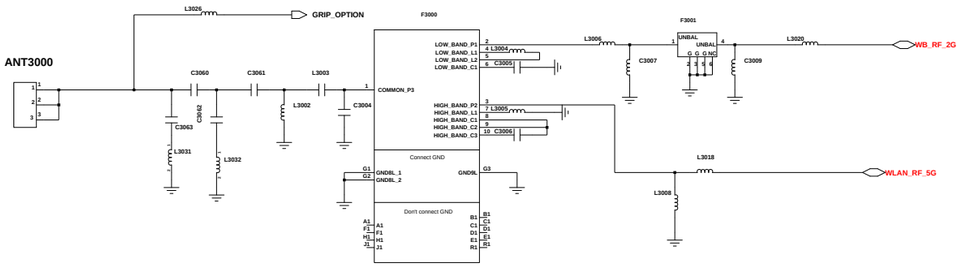

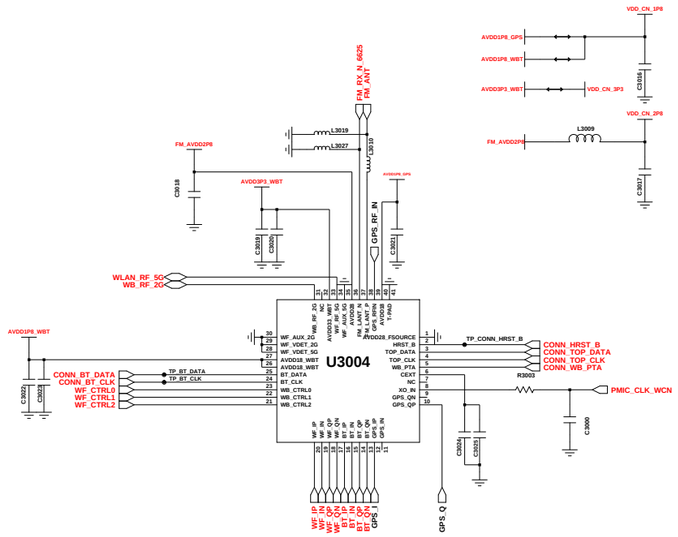

23.06.15 @KIM 390K -> 100K

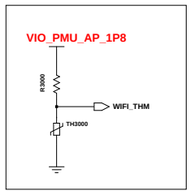

DRX MHB /GPS L1 /GNSS /BEIDOU

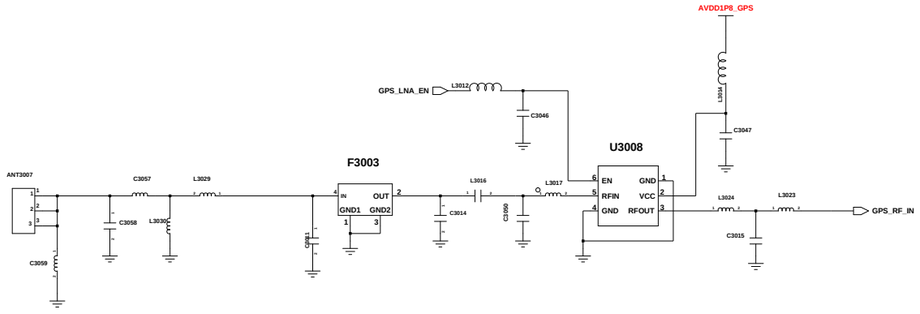

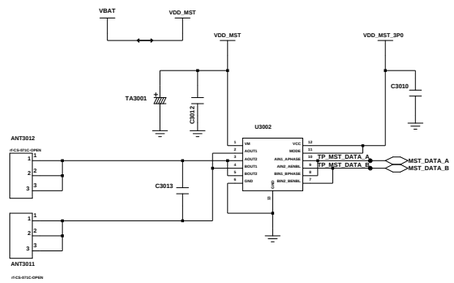

@230616 by PG 1203-008872 -> 1203-008926

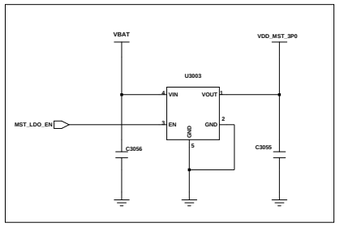

MST

KOR : ONLY USE

GND CCP

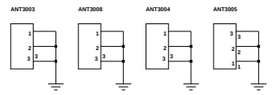

NFC(OPTION)

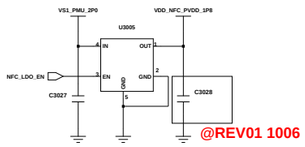

@REV01 1006

@230615 - 2203-002393 quality issue change by CQCQ

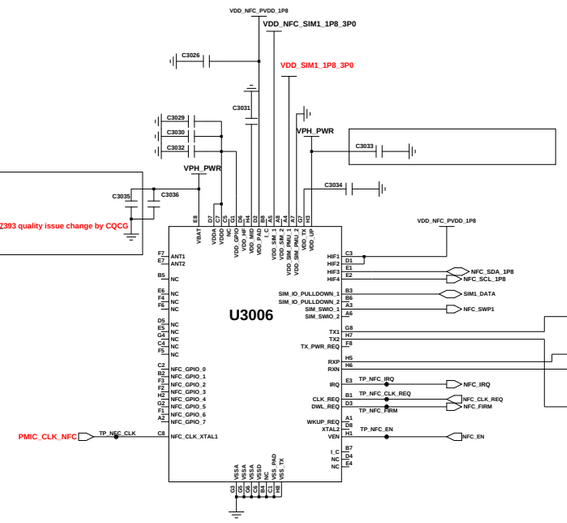

@0831 1.5 -> 2.0

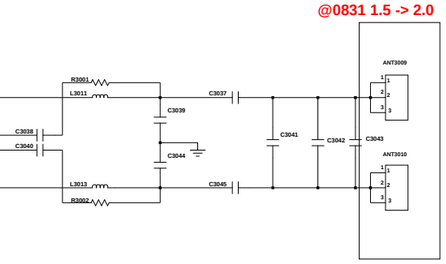

NFC	NFC PART	Power supply of SIM1		NFC GPIO	
	U3006	R7009	R7010	R4022	R4025
CIS/MEA/SEA/LA/KOR NFC	SMD	short	open	10K ohm	open
SWA nonNFC	NC	open	short	open	10K ohm

Engineer:					
Drawn by:					
R&D CHK:	TITLE: WIFI/NFC/GPS				Size:
DOC CTRL CHK:					
MFG ENGR CHK:					
Changed by: user115	Date Changed:	Time Changed:	QA CHK:	REV	Drawing Number:
					Page: 3

SAMSUNG CONFIDENTIAL
THIS DOCUMENT CONTAINS CONFIDENTIAL
PROPRIETARY INFORMATION THAT IS
SAMSUNG ELECTRONICS CO'S PROPERTY.
DO NOT DISCLOSE TO OR DUPLICATE FOR OTHERS
EXCEPT AS AUTHORIZED BY SAMSUNG.

MT6789

UCP4000-1

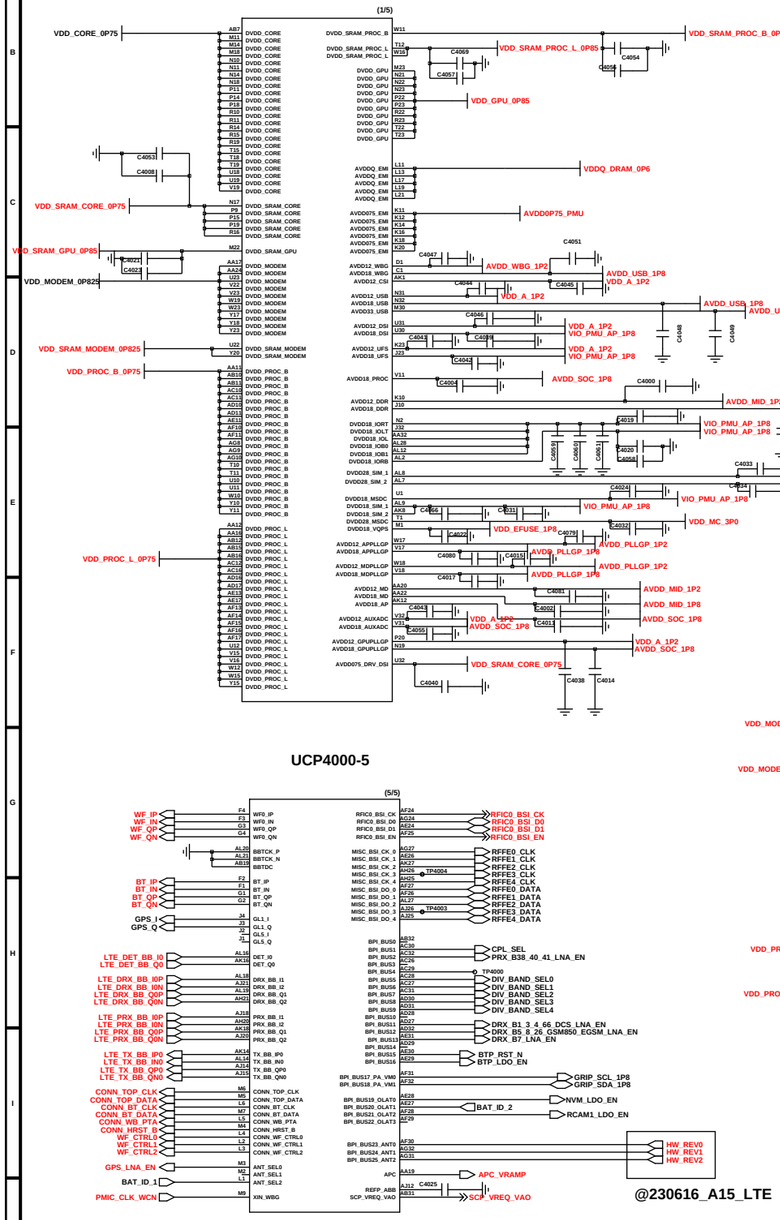

UCP4000-5

I2C PULL UP

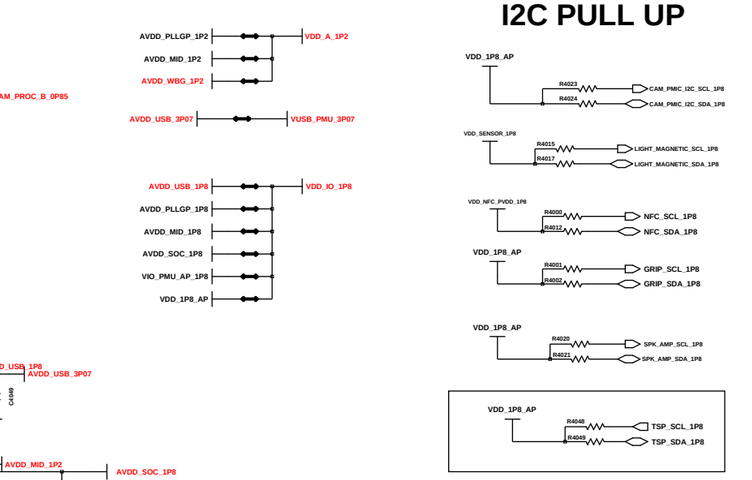

UCP4000-2

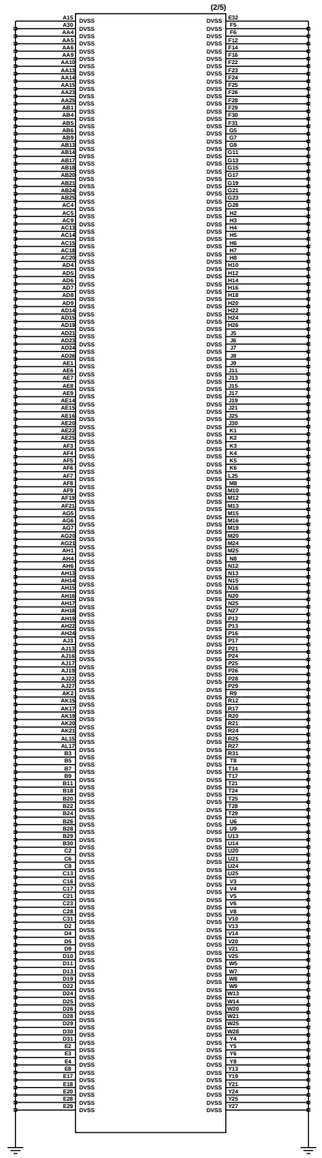

UCP4000-3

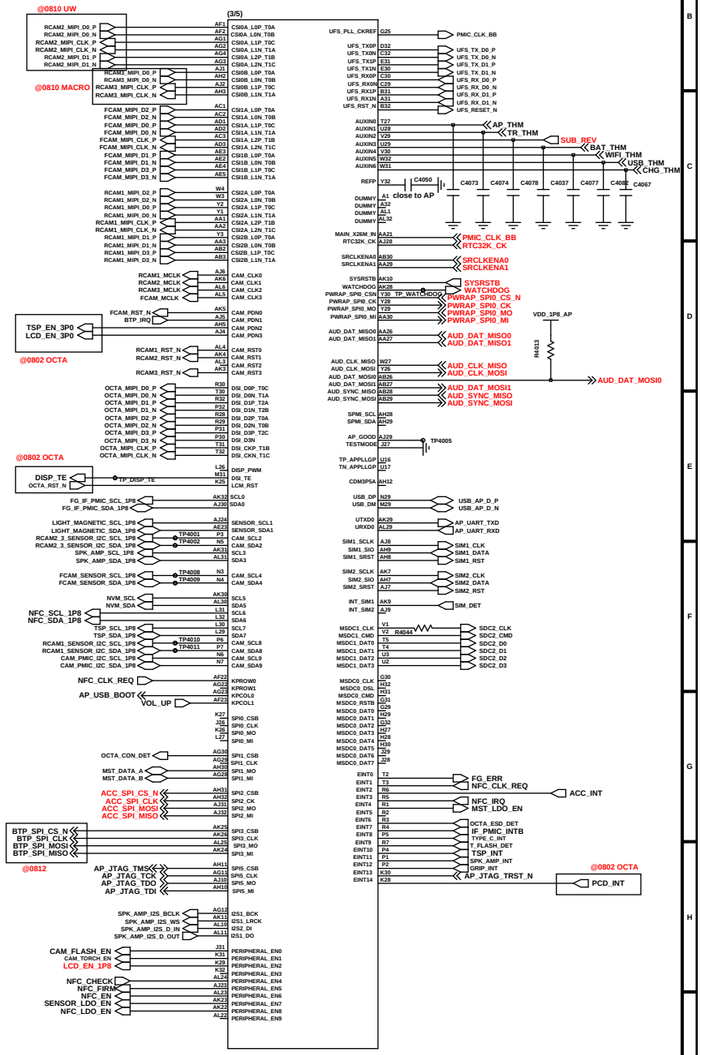

NFC OPTION

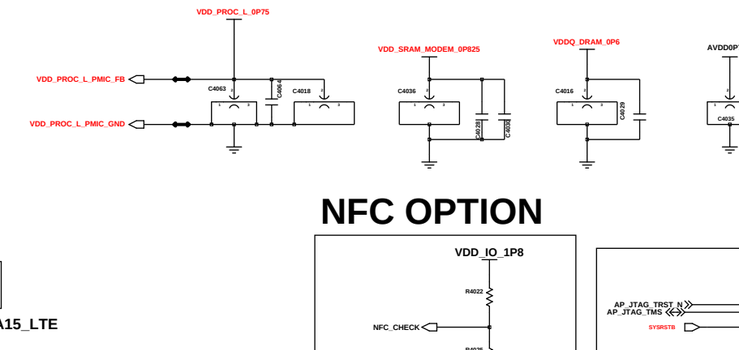

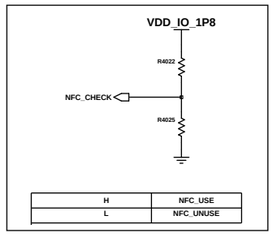

H	NFC_USE
L	NFC_UNUSE

JTAG TP

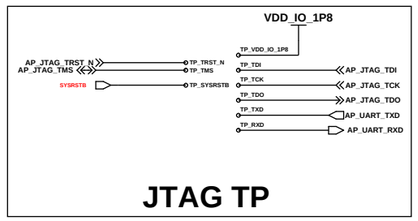

PCB array JTAG

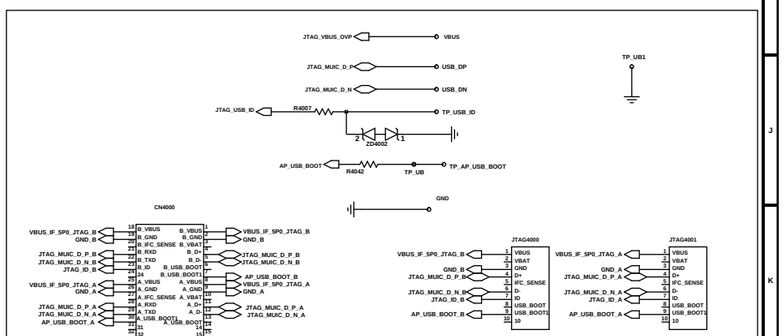

H/W Revision Setting

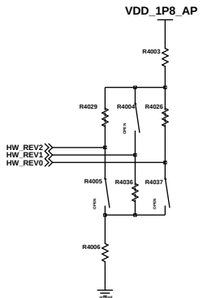

MODEL	REV	HW_VER2	HW_VER1	HW_VER0
A15 LTE	0.0	0	0	0
A15 LTE	0.1	0	0	1
A15 LTE	0.2	0	1	0
A15 LTE	0.2A	0	1	1
A15 LTE	0.3	1	0	0
A15 LTE	0.3D	1	0	1

Thermister

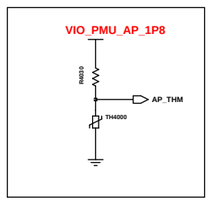

NVM

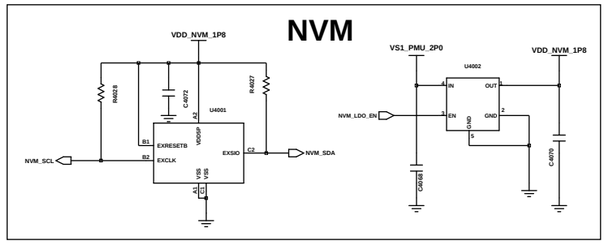

Engineer	
Drawn by:	
R&D CHK:	
DOC CTRL CHK:	
MFG ENGR CHK:	
QA CHK:	

TITLE: AP/CP

Size

Drawing Number

Changed by: | Date Changed: | Time Changed:

SAMSUNG CONFIDENTIAL
THIS DOCUMENT CONTAINS CONFIDENTIAL PROPRIETARY INFORMATION THAT IS SAMSUNG ELECTRONICS CO'S PROPERTY. DO NOT DISCLOSE TO OR DUPLICATE FOR OTHERS EXCEPT AS AUTHORIZED BY SAMSUNG.

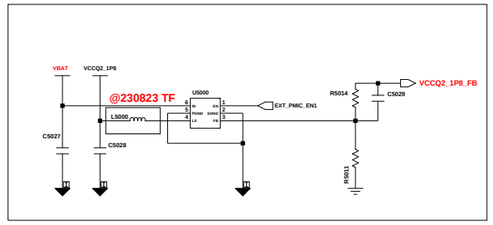

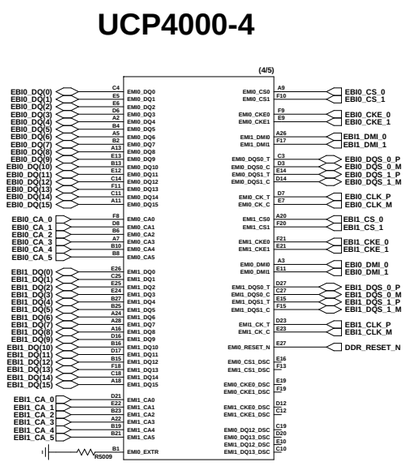

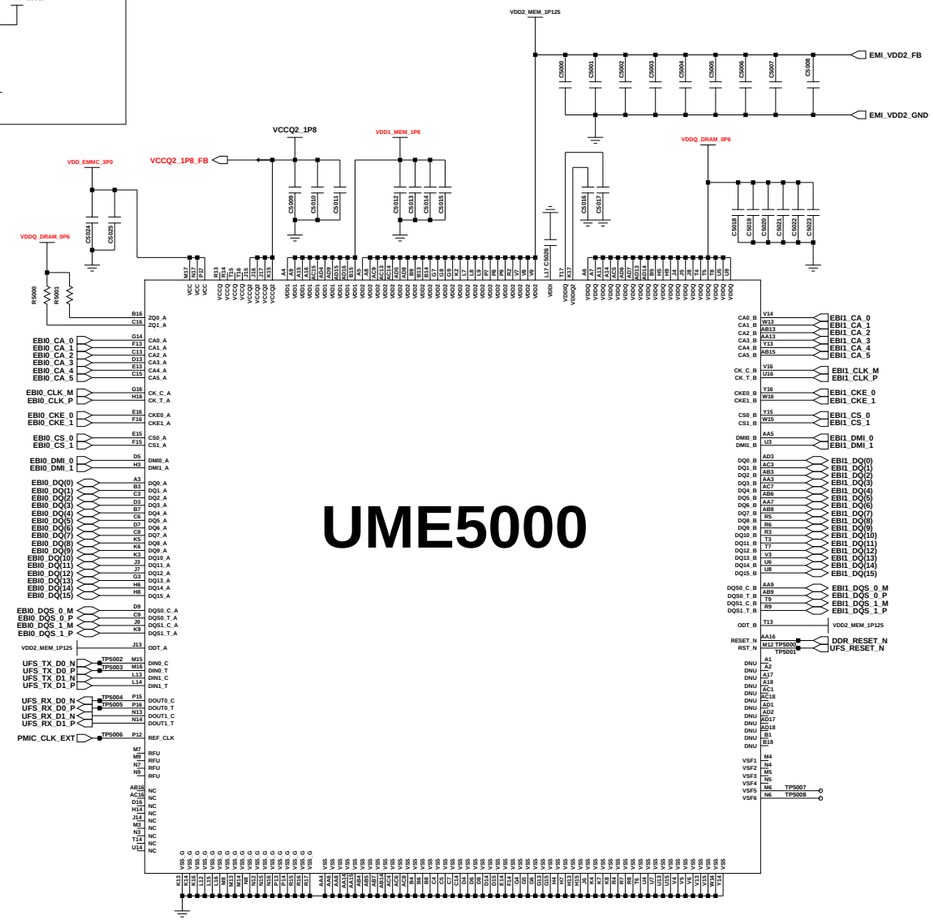

UCP4000-4

UME5000

uMCP (LP4x + UFS)

KM5L9001DA-B424 -> 4+128

NEW PART

D1Z V6 -> D1Z V6P

MEMORY

4GB/128GB	R5004
6GB/128GB	R5005 (NC)
8GB/128GB	R5002 (NC)
8GB/256GB	R5003 (NC)

REGION

GLOBAL_F	R5007 (NC)
SWA_F_NON_NFC	R5006 (NC)
KOR_N	R5010 (NC)
LA_M	R5008

Engineer:	
Drawn by:	
R&D CHK:	
DOC CTRL CHK:	
MFG ENGR CHK:	
TITLE:	AP/CP/uMCP
Size:	
Changed by:	
Date Changed:	
Time Changed:	
QA CHK:	
REV	
Drawing Number:	
Page:	

SAMSUNG CONFIDENTIAL
THIS DOCUMENT CONTAINS CONFIDENTIAL
AND PROPRIETARY INFORMATION OF
SAMSUNG ELECTRONICS CO'S PROPERTY.
DO NOT DISCLOSE TO OR DUPLICATE FOR OTHERS
EXCEPT AS AUTHORIZED BY SAMSUNG.

PMIC (MT6366)

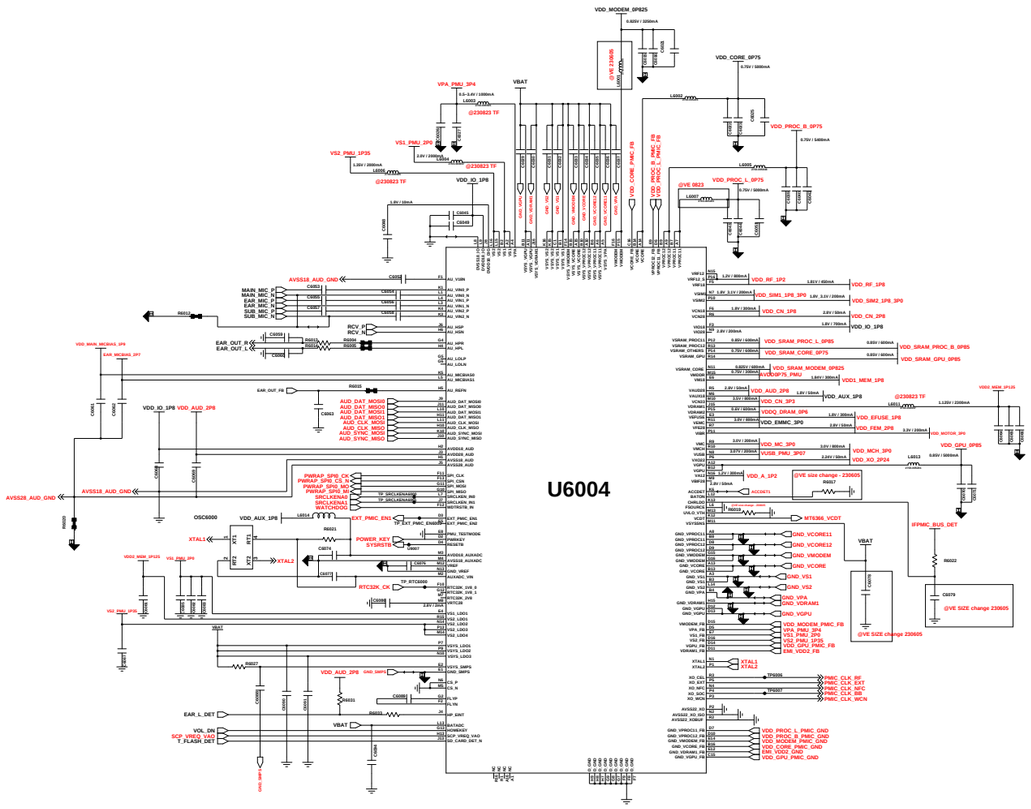

DIRECT CHARGER SM5461

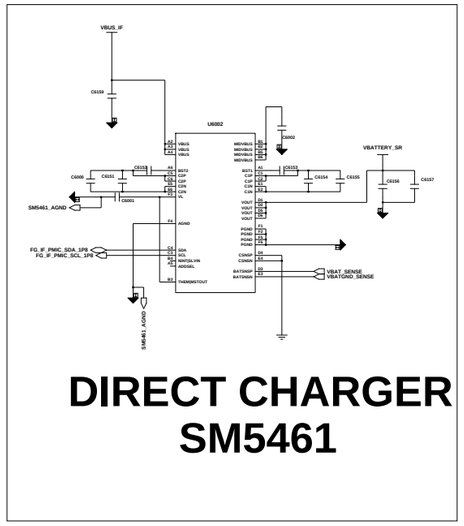

IF_PMIC(SM5714)

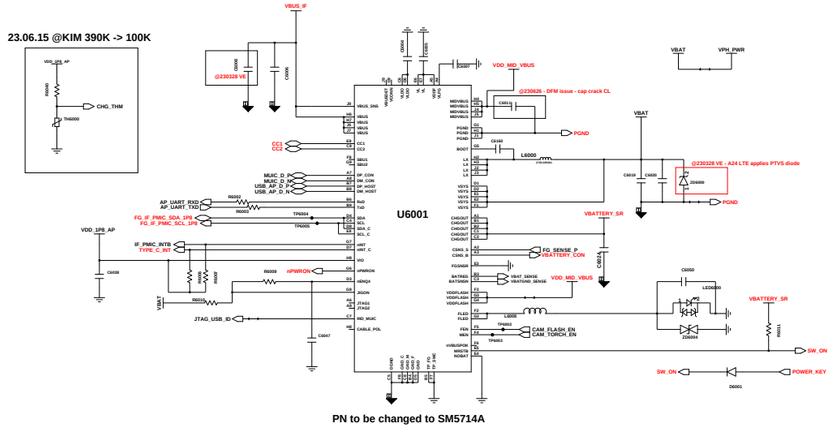

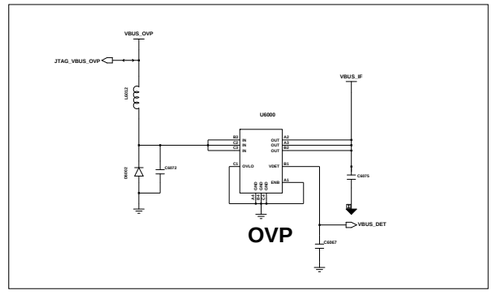

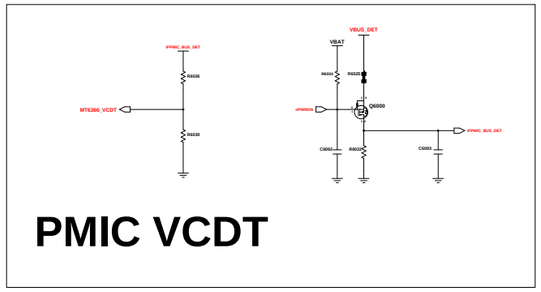

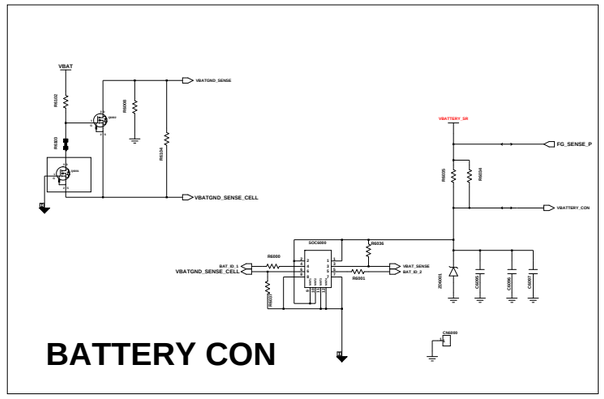

PMIC LDO Decap

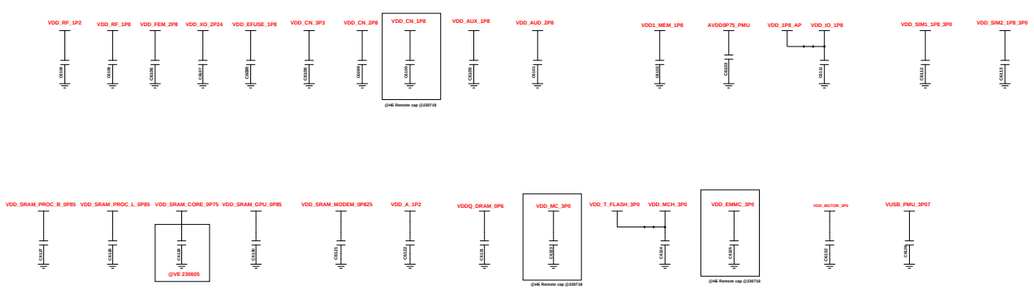

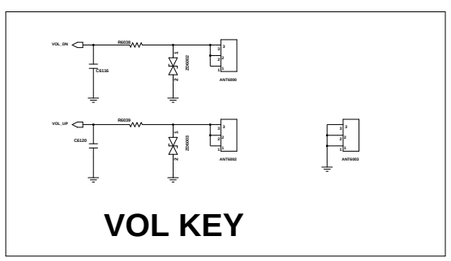

Engineer:	
Drawn by:	
R&D CHK:	TITLE: POWER/KEY
DOC CTRL CHK:	
MFG DOCUMENT CHK:	
Changed by: / Date Changed: / Time Changed: / QA CHK:	REV: / Drawing Number:

SAMSUNG CONFIDENTIAL
THIS DOCUMENT CONTAINS CONFIDENTIAL PROPRIETARY INFORMATION THAT IS SAMSUNG ELECTRONICS CO'S PROPERTY. DO NOT DISCLOSE TO OR DUPLICATE FOR OTHERS EXCEPT AS AUTHORIZED BY SAMSUNG.

AUDIO & SENSOR PART

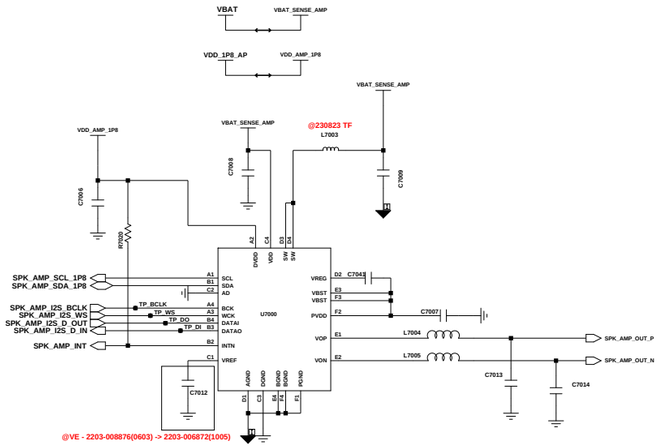

SPK AMP

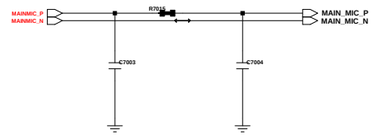

MAIN MIC

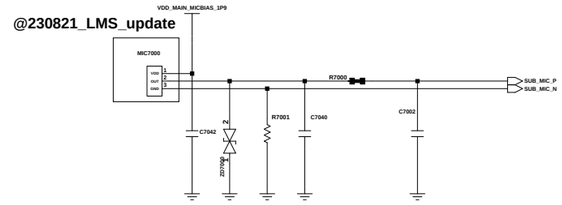

2nd MIC

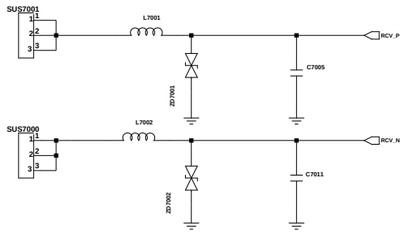

RCV CONTACT

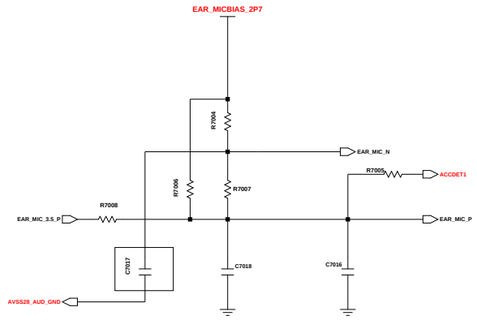

EAR MIC

SENSOR

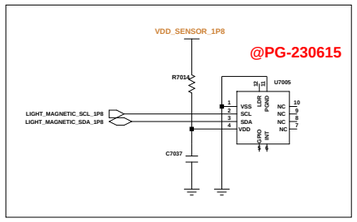

AMBIENT SENSOR

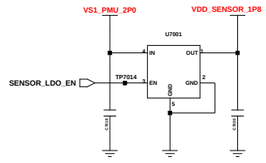

SENSOR LDO

DUAL SIM / T-FLASH (3in2 Z stack)

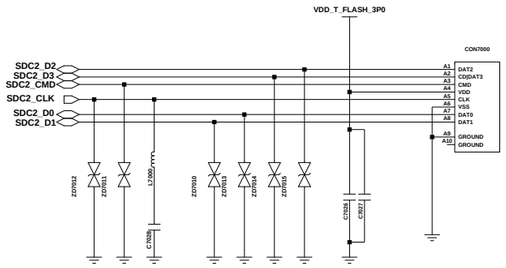

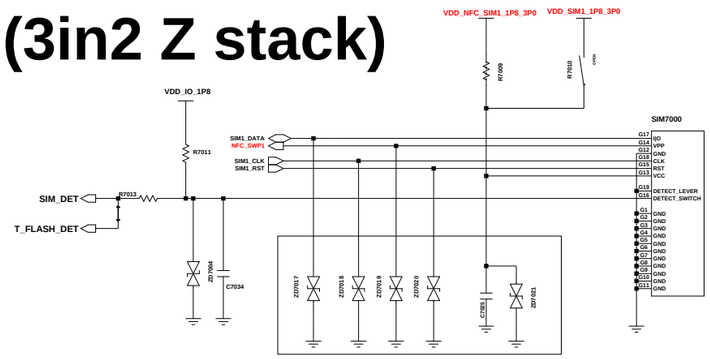

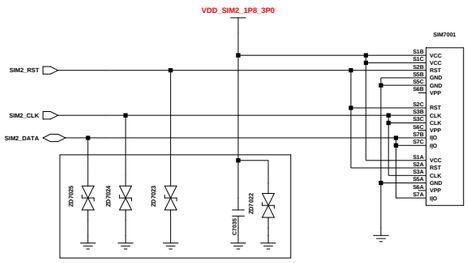

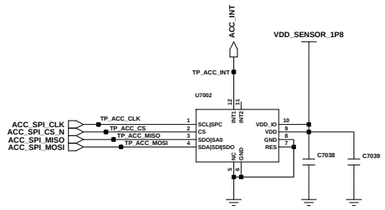

ACC only SENSOR

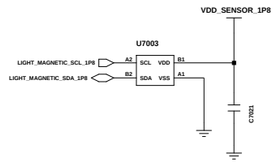

MAGNETIC SENSOR
(by PG)

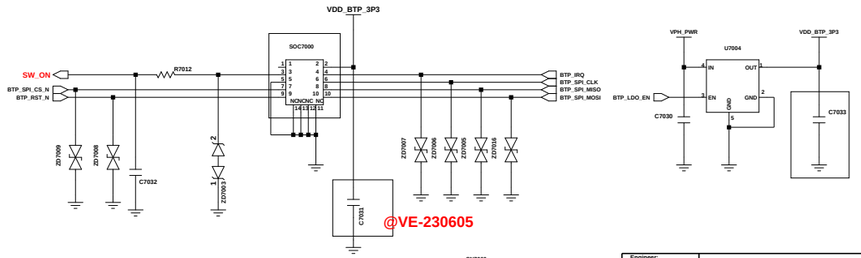

PWR & SIDE FPS

Engineer:			
Drawn by:			
R&D CHK:	TITLE: AUDIO/SIM&SD/SENSOR		Size:
DOC CTRL CHK:			
MFG ENGR CHK:			
Changed by:	Date Changed:	Time Changed:	QA CHK:
REV:	Drawing Number:	Page:	

SAMSUNG CONFIDENTIAL
THIS DOCUMENT CONTAINS CONFIDENTIAL
PROPRIETARY INFORMATION THAT IS
SAMSUNG ELECTRONICS CO'S PROPERTY.
DO NOT DISCLOSE TO OR DUPLICATE FOR OTHERS
EXCEPT AS AUTHORIZED BY SAMSUNG.

CAMERA

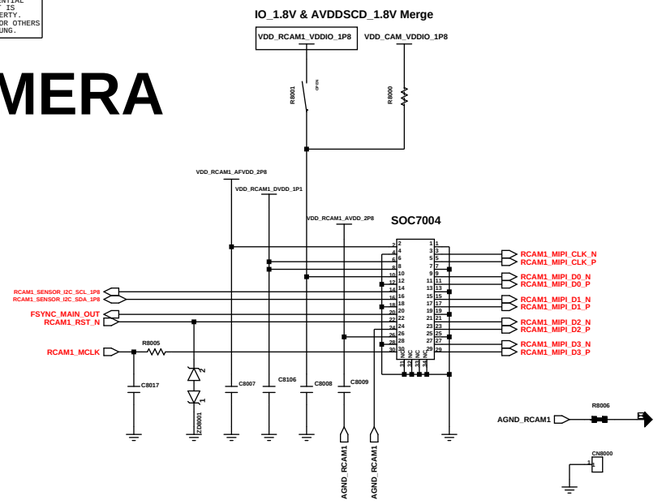

RCAM1_50M(30PIN)

(A04S CAM pin map)

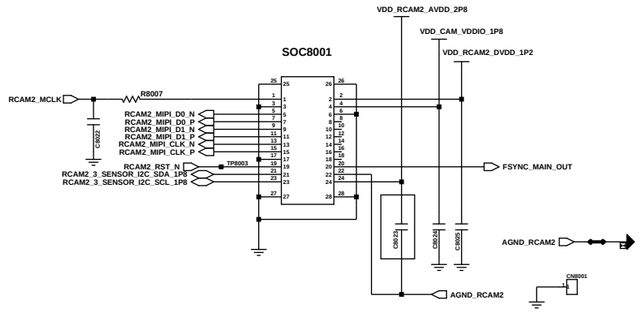

RCAM2_5M_UW (24pin)

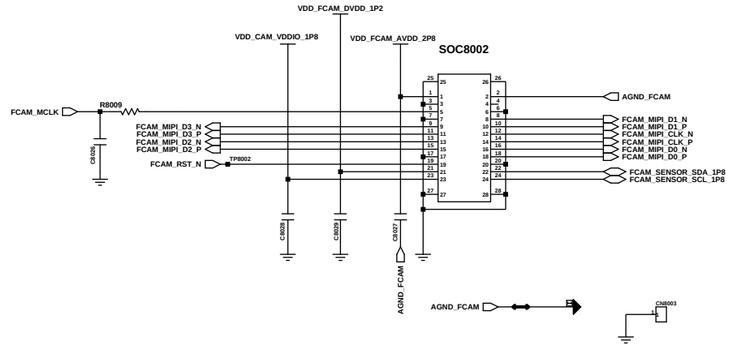

FRONT_13M CAMERA (24PIN)

(A05S[JDM] Moule)

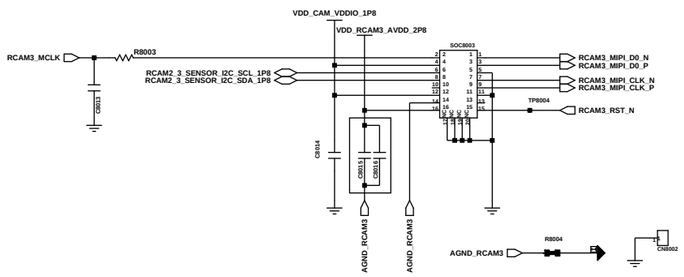

RCAM3_2M MACRO CAMERA(16PIN)

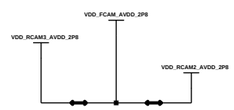

CAM PMIC

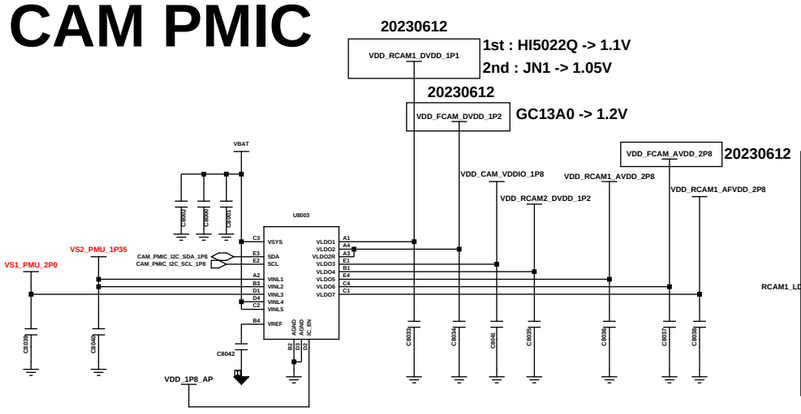

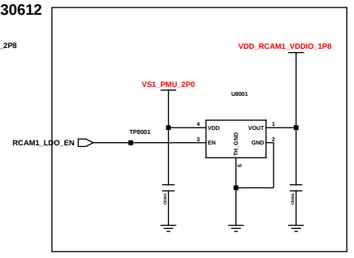

RCAM1 IO_1.8V & AVDDSCD_1.8V Merge

Engineer:	
Drawn by:	
R&D CHK:	
DOC CTRL CHK:	
MFG ENGR CHK:	
QA CHK:	
TITLE:	CAMERA
Size:	
REV	
Drawing Number:	
Page:	7/8

Changed by: | Date Changed: | Time Changed:

SAMSUNG CONFIDENTIAL
THIS DOCUMENT CONTAINS CONFIDENTIAL PROPRIETARY INFORMATION THAT IS SAMSUNG ELECTRONICS CO'S PROPERTY. DO NOT DISCLOSE TO OR DUPLICATE FOR OTHERS EXCEPT AS AUTHORIZED BY SAMSUNG.

C2C (Conn to Conn FPCB)

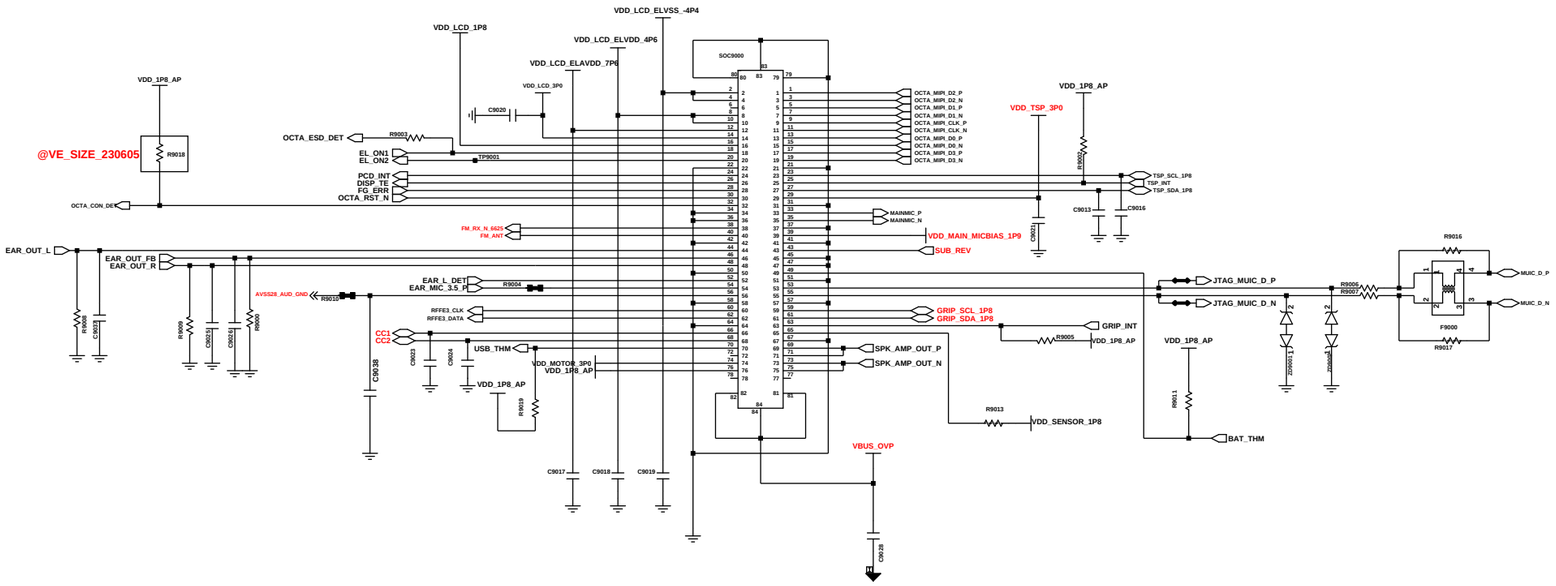

DISPLAY

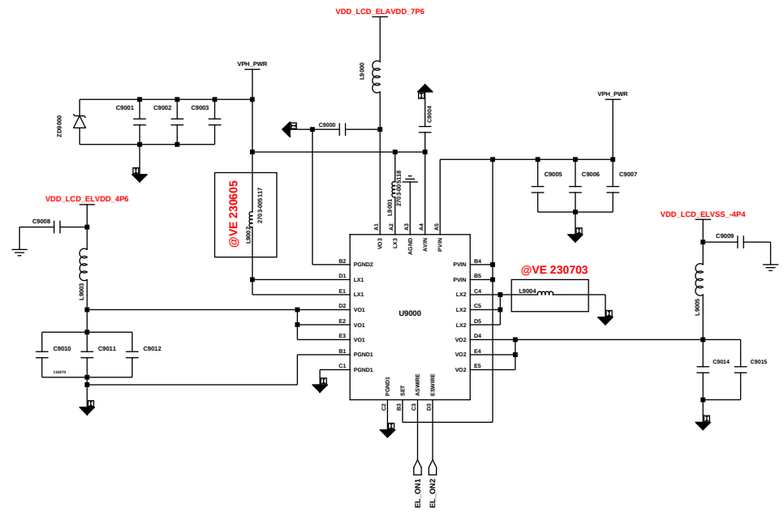

OCTA DCDC

230613

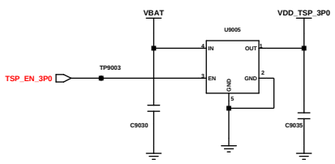

TSP LDO

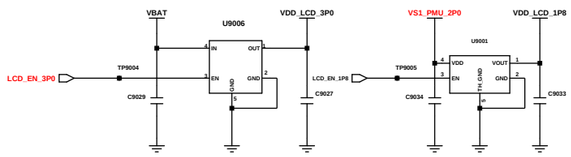

LCD LDO

GRIP SENSOR LDO

SHIELD CAN/BOTH HOLE

2D BARCODE

board screw

AP

MEM

RF

PMIC

DRX

WIFI

Engineer:	
Drawn by:	
R&D CHK:	
DOC CTRL CHK:	
MFG ENGR CHK:	
QA CHK:	
TITLE:	MAIN CON / OCTA DCDC
Size:	
REV:	
Drawing Number:	
Page:	

Changed by: user28 | Date Changed: Thursday, June 18, 2015 | Time Changed: 10:18:28 am

SM-A155M

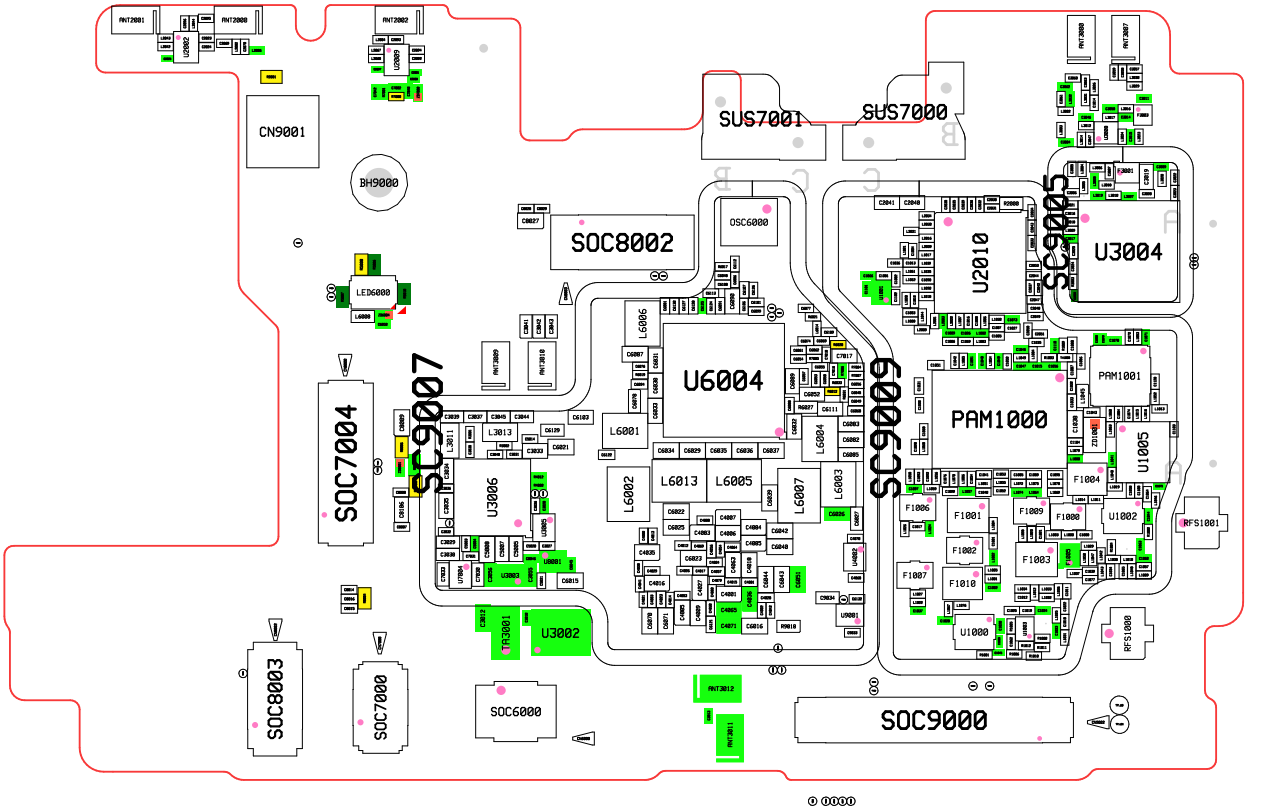
ANT2001
ANT2000
U2002
ANT2002
U2003
CN9001
BH9000
LED6000
L6000
SOC7004
SOC8003
SOC7000
SOC8002
SC9007
U3006
U3002
TP3001
SOC6000
ANT3009
ANT3010
ANT3012
ANT3011
OSC6000
U6004
L6006
L6001
L6002
L6013
L6005
L6007
L6003
L6004
SC9006
SUS7001
SUS7000
SOC9000
U2010
SC9005
U3004
PAM1000
PAM1001
U1005
U1002
U1000
F1006
F1001
F1002
F1010
F1007
F1009
F1008
F1003
F1004
RFS1001
RFS1000
ANT3008
ANT3007

SM-A155M

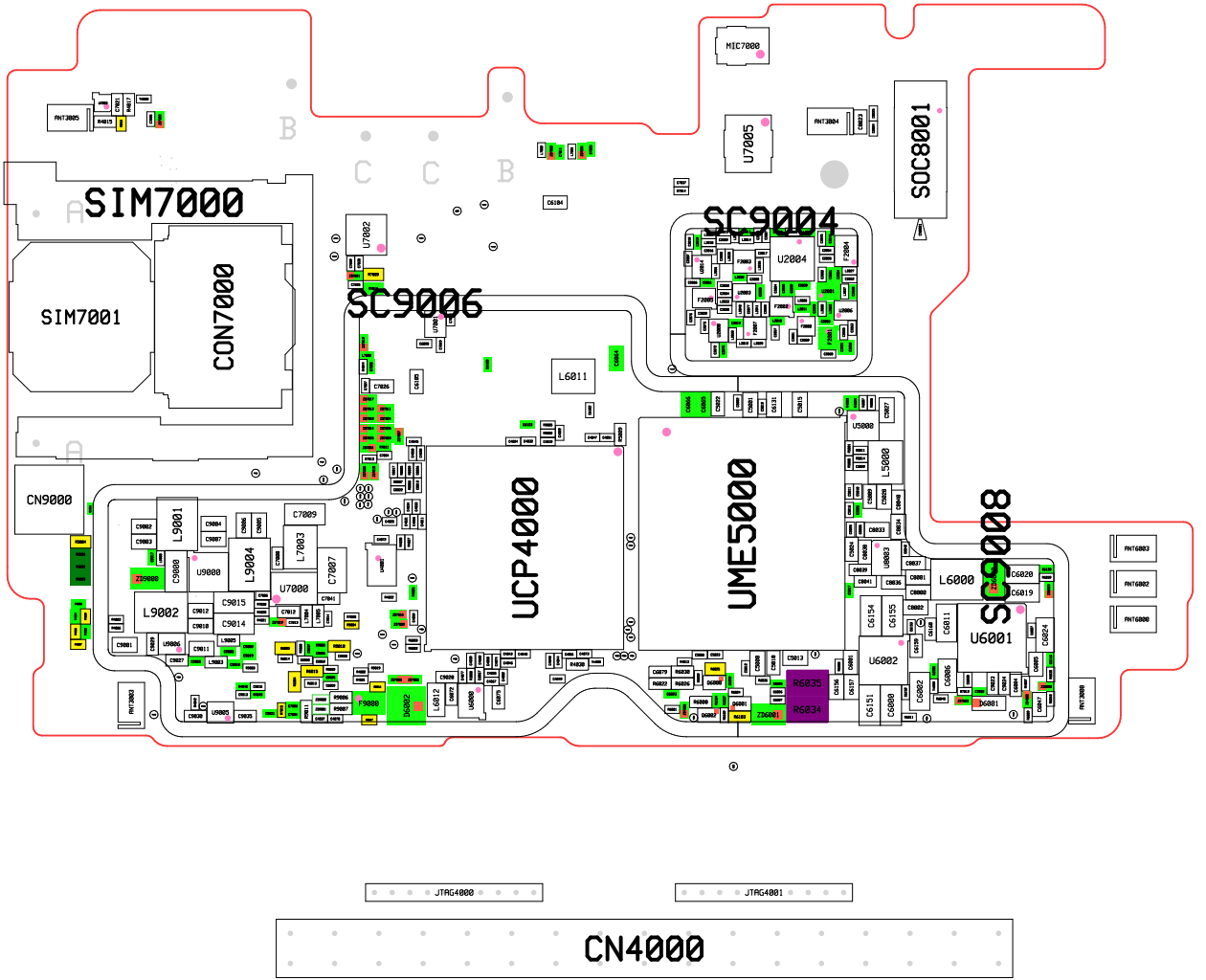
SIM7000
SIM7001
CON7000
SC9006
SC9004
SOC8001
UCP4000
UME5000
SC9008
CN9000
MIC7000
U7005
U2004
U7002
L6011
L9001
L9004
L9002
U9000
U7000
L7003
C7007
C7009
L5000
U5000
L6000
U6001
U6002
R6035
R6034
JTAG4000
JTAG4001
CN4000

SAMSUNG CONFIDENTIAL
THIS DOCUMENT CONTAINS CONFIDENTIAL
AND PROPRIETARY INFORMATION OF
SAMSUNG ELECTRONICS CO'S PROPERTY.
DO NOT DISCLOSE TO OR DUPLICATE FOR OTHERS
EXCEPT AS AUTHORIZED BY SAMSUNG.

A15_SUB_REV05_231019F

SM-A155F/M
Common

GH96-16630A

MAIN ANTENNA1 (LB)

MAIN ANTENNA1 (X-GND)

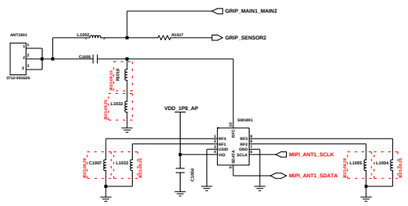

MAIN ANTENNA2 (MB, HB)

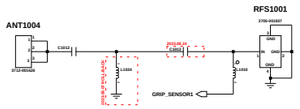

MAIN ANTENNA2 (X-GND)

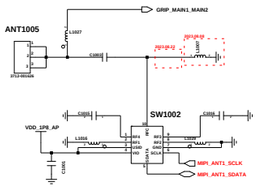

CABLE CLIP

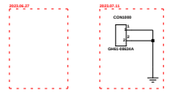

MOTOR

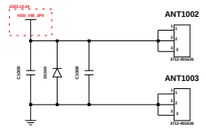

MAIN FPCB 40PIN

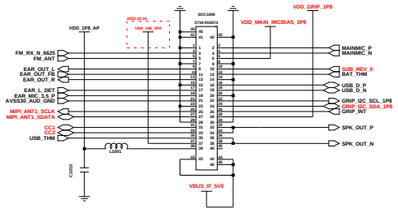

BAT_THM

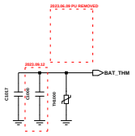

USB_THM

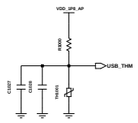

SUB Region

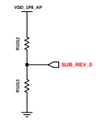

ID	VOLTAGE	R1512	R1513	COMMENT
00	0	NC	100K	DEFAULT (SM-A156E/SM-A155F)
01	0.25	180K	39K	
02	0.5	330K	120K	
03	0.75	270K	180K	
04	1.0	100K	100K	RESERVED FOR M52F15
05	1.3	120K	330K	
06	1.6	180K	NC	A15-5G NA (SM-A156U)

EARJACK

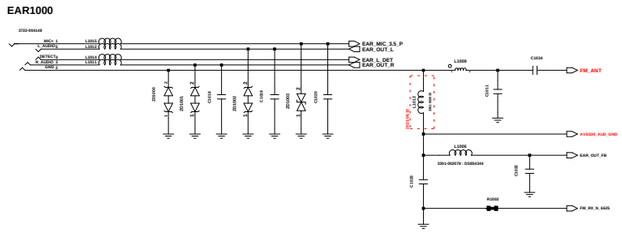

IF CONN

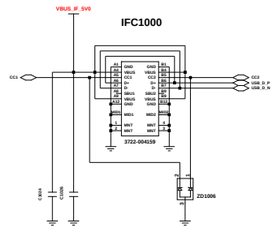

GRIP SENSOR

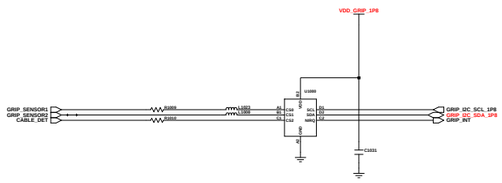

SPK

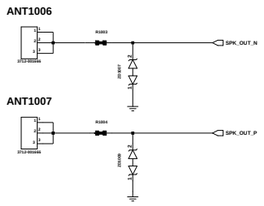

MIC

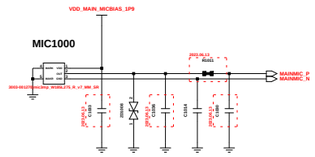

SOLDER MARKING FOR BASIC/NA/M15

B	R1001	A15-5G/LTE
U	R1002	A15-NA
M	R1003	RESERVED FOR M15/F15

SMR GASKET

FIDUCIAL MARK

Engineer:	
Drawn by:	
R&D CHK:	
DOC CTRL CHK:	
MFG ENGR CHK:	
TITLE:	SM-A245F_SUB_REV02
Size:	
REV:	
Drawing Number:	
Page:	

SM-A155F/M
Common

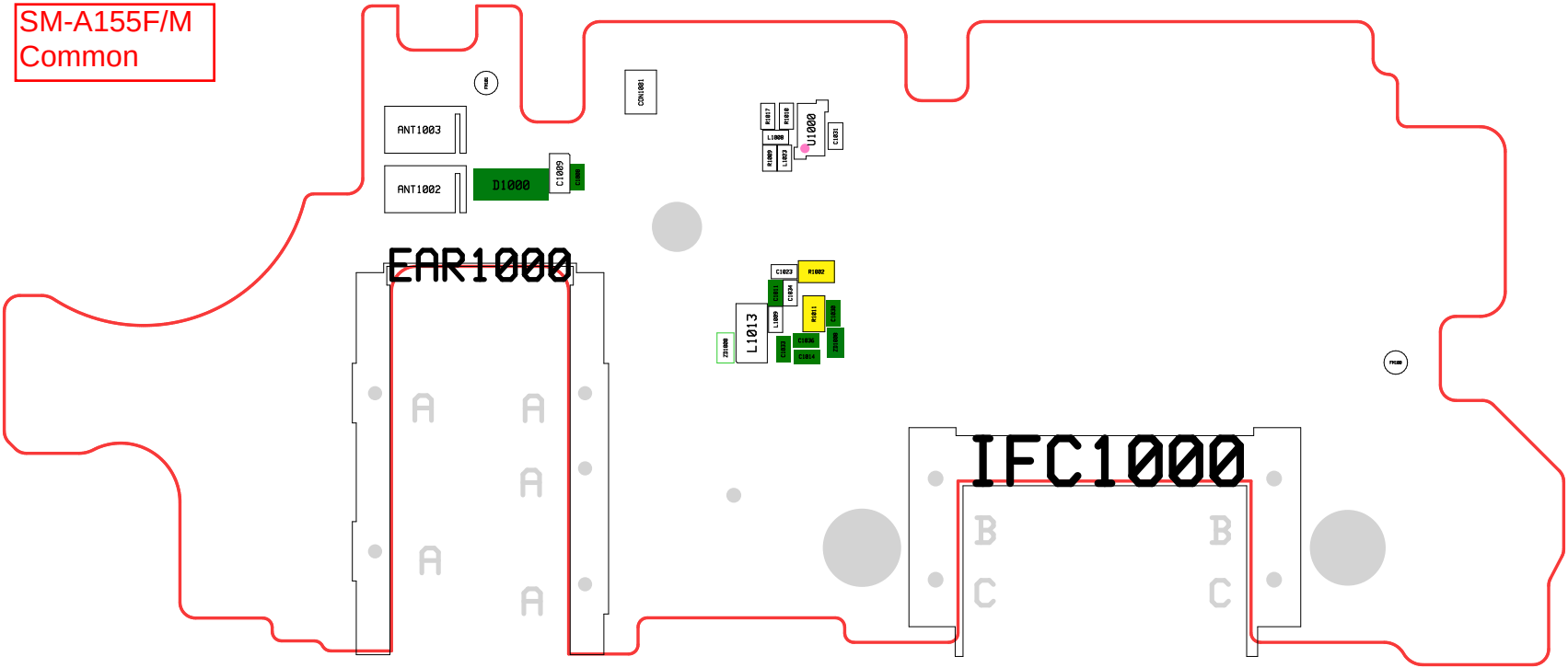
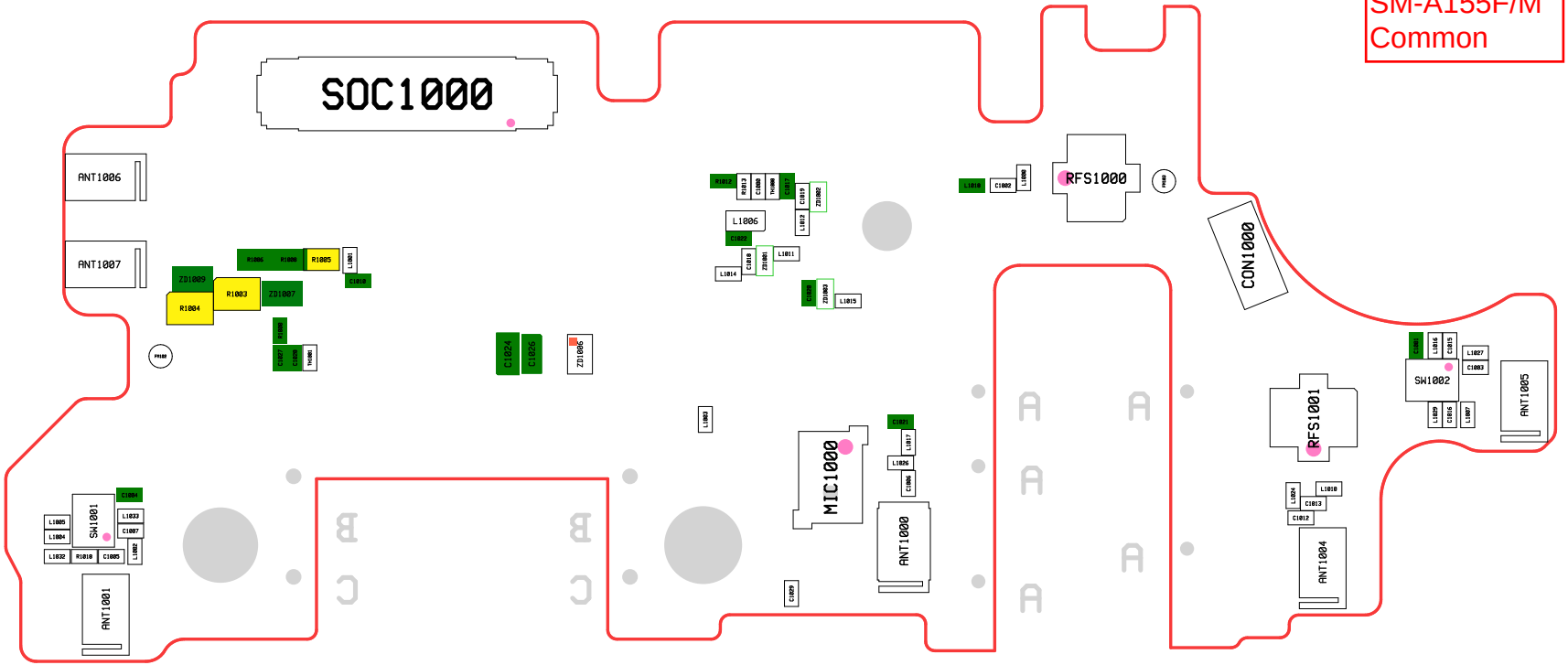
SM-A155F/M
Common